Trans Brake Wiring and Software Configuration Addendum

Revision 2

Overview

The Trans-Brake function allows the Elite ECU to control a trans-brake in an automatic transmission. The Trans-Brake allows the engine to develop full power without that power being transmitted into the drive-train. This is achieved by using a trans-brake solenoid, which locks the transmission into both first and reverse gears simultaneously, locking the output of the transmission.

This function can be used in a drag racing situation, where the driver can use the trans-brake to assist in the staging process. Due to the significant delay in the time it takes for a Turbo charged vehicle to "spool up" and reach maximum launch power, there is a Bump and Creep function included within the Trans-Brake Settings. Bumping/Creeping allows for the vehicle to roll while still maintaining maximum launch power. Bumping or Creeping is achieved by pulsing the trans-brake solenoid on and off at a certain frequency and duty cycle.

Wiring

NOTE: The current from the ECU will not be sufficient to support the trans-brake solenoid, thus it is necessary to use the ECU output to trigger a relay (a solid state relay if being used for bump/creep) that then operates the solenoid

Please See Illustrations for typical wiring designed for minimum trans brake release latency.

Software Settings

For applications such as an Naturally Aspirated, Supercharged, or Nitrous combination, that do NOT require the vehicle to "spool up" then stage, set Trans Brake Control to "Input Only". Bump Box function will be "Not Used"

For typical Turbo applications, Configure the Trans Brake Control as "Input and Output". Upon the activation of the Trans Brake input, this will enable the Trans Brake Output and also enable the Trans Brake RPM Limiter (if enabled)

In the Bump box function there are two user may select Bump or Creep. The 'Creep' setting is a user-controlled time where the ECU will pulse the output to the solenoid for as long as the driver activates the Bump/Creep Input. Using the 'Bump' setting the ECU will pulse the output to the solenoid for a programmable length of time, and that output will occur once each time the Bump/Creep input is activated.

For maximum staging consistency, Haltech recommends using the "Bump" setting, which is identical to the creep function, however implementing the predetermined time limit on the Bump/Creep output delivers consistent results in the staging process.

Several variables will affect the bump/creep movement speed, including RPM, Transmission Temp, Torque Convertor design, Charge Pressure Bypass Valve , Brake Pressure, etc...

The following are recommended base settings/ranges, however it will be necessary to spool the engine and test the Bump/creep settings and adjust to suit your particular combination.

RPM Limiter Method: Ignition (this will provide the most consistent Launch RPM)

RPM Limit: Set this to you desired Launch RPM i.e. 4500rpm

Bump/Creep Frequency: 20-100hz

Bump/Creep Duty Cycle: 70%-90%

Bump Time: 0.100 sec - 0.020 sec

Trans Brake Enable Condition: Driveshaft RPM is "Less than" 500 RPM (This will prevent inadvertent trans brake activation at high speed to prevent transmission damage)

Typical Trans Brake and Bump/Creep Setup using Optically Isolated 100A Solid State Relay

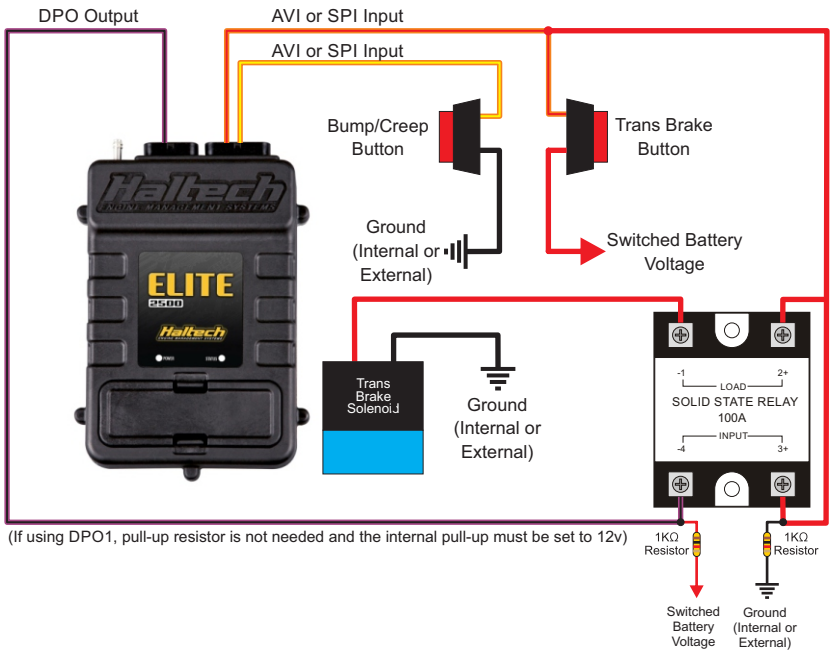

Typical Trans Brake and Bump/Creep Setup using 554-111 40A Solid State Relay

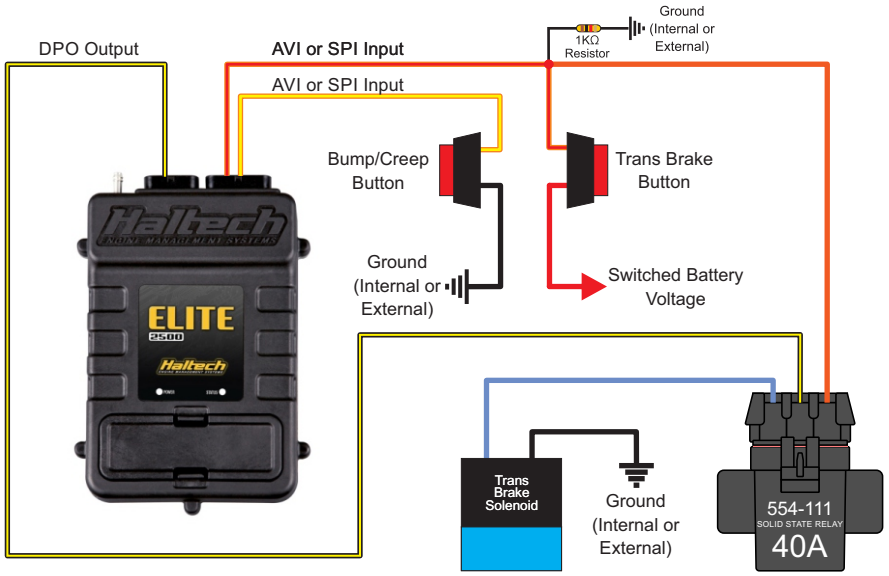

Trans Brake Wiring Addendum

Revision #2

Haltech ENGINE MANAGEMENT SYSTEMS

Need more help?

Intl: +61 2 9729 0999
USA: +1 888 298 8116

Intl: support@haltech.com
USA: usasupport@haltech.com

www.haltech.com /Haltechecu /HaltechEngineManagement