F10X WIRING DIAGRAM

Haltech™ ENGINE MANAGEMENT SYSTEMS

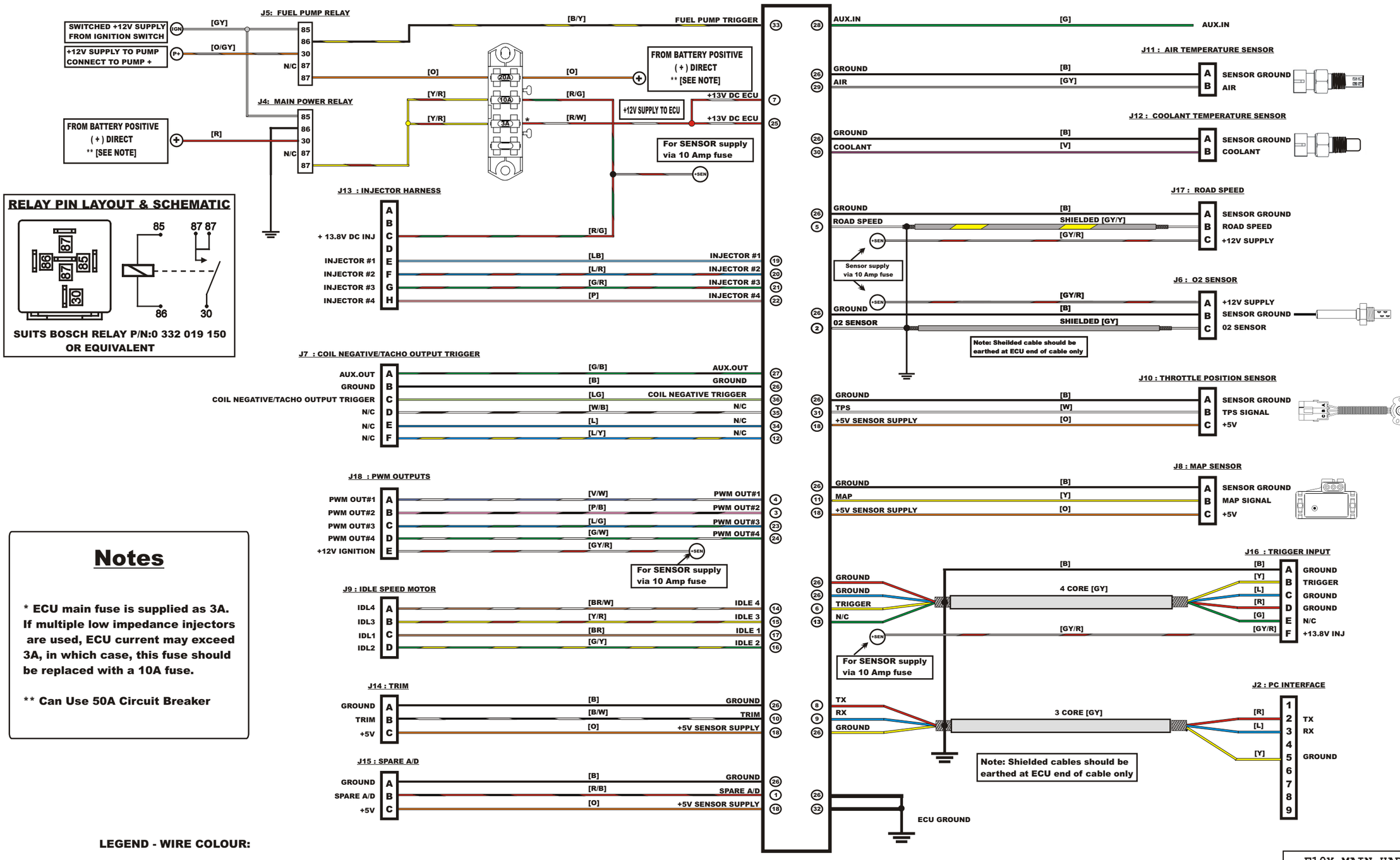

Notes

* ECU main fuse is supplied as 3A. If multiple low impedance injectors are used, ECU current may exceed 3A, in which case, this fuse should be replaced with a 10A fuse.

** Can Use 50A Circuit Breaker

LEGEND - WIRE COLOUR:

B = BLACK BR = BROWN LG = LIGHT GREEN G = GREEN GY = GREY LB = LIGHT BLUE L = BLUE O = ORANGE P = PINK R = RED V = VIOLET Y = YELLOW

WHEN TWO COLOURS ARE USED IN A WIRE BY THE ALPHABETICAL CODE, THE FIRST LETTER INDICATES THE BASIC WIRE COLOUR, THE SECOND COLOUR INDICATES THE COLOUR OF THE STRIPE.

F10X MAIN HARNESS ELECTRICAL	
HALTECH, SYDNEY AUSTRALIA	
DATE: 5TH NOVEMBER 2008	
REV A	SHEET 1 OF 1